IM-45CNE-25

Cube Ice Maker

PRODUCT FEATURES

- New intelligent control circuit dedicated to saving power and water consumption.
- Inbuilt safety features - freeze cycle back up timer, defrost back up, low voltage & high amp protector.
- New 7 segment operational display panel for ease of use.
- Unique closed cell water circuit for ultimate contamination protection.
- Durable stainless steel exterior.
- Easily accessible & cleanable air filters reduce costly callouts.
- Exceptionally hard crystal clear cubes that melt slowly.
- Auto rinse and flush cycle.
- 3 year parts & labour warranty on entire unit, 5 year (parts only) on compressor & air cooled condenser coil.

CUBE SIZE:

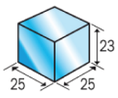

Medium

TECHNICAL DRAWING

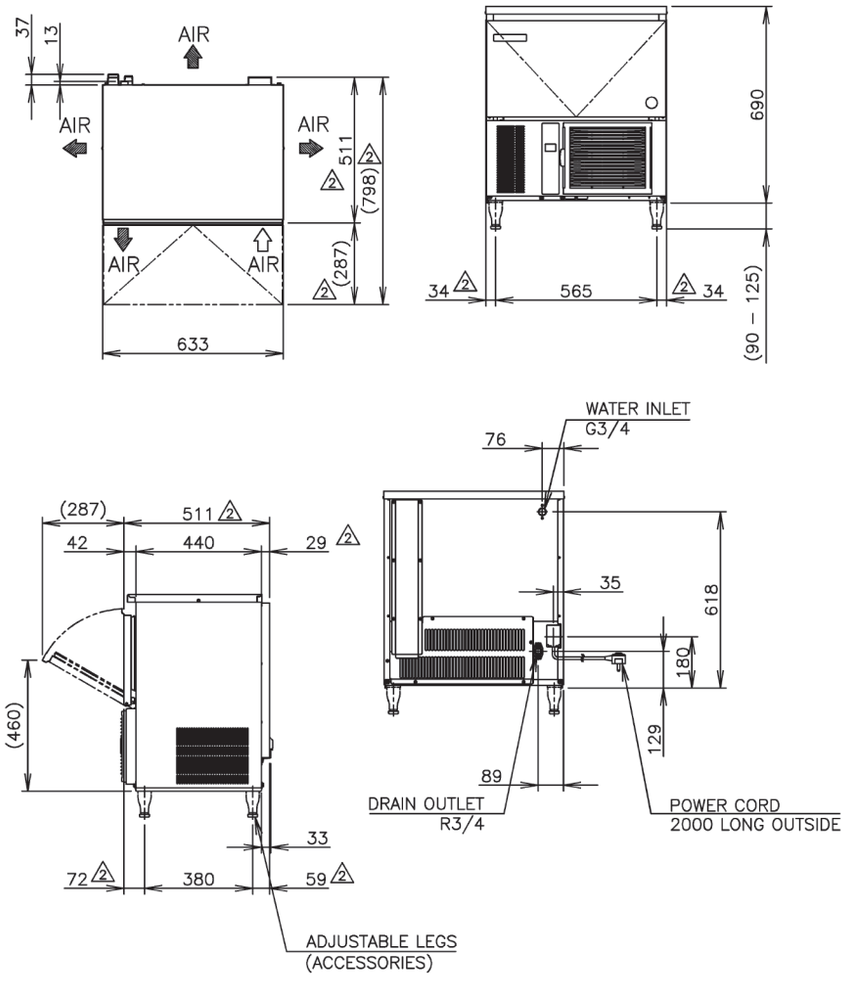

PRODUCT SPECIFICATION

Production Capacity per 24hours	Approx. 35kg @10°C Air temp; 10°C Water Approx. 32kg @21°C Air temp; 15°C Water Approx. 27kg @32°C Air temp; 21°C Water
Max Storage Capacity	Approx. 15kg (Bin Control Setting Approx. 8kg)
Freeze Cycle Time	Approx. 22 Min
Ice Production Per cycle	Approx. 0.55kg/42pcs
Dimensions	633mm (W) x 511mm (D) x 780mm (H) (Units include adjustable legs 90-125mm)
Cooling	Air
Weight Net/Gross (kg)	48 / 56
AC Supply Voltage	1 PHASE 220-240V 50Hz / 10AMP Plug
Amperage	Running: 2.4A Rated: 2.4A Starting: 13A
Refrigerant Charge	R134a / 160g
Operating Conditions	Ambient Temp.: 1-40°C Water Supply Temp.: 5-35°C Water Supply Pressure: 0.07-0.8MPa (0.7-8bar) Voltage Range: Rated Voltage ±6%

Descriptions and specifications are subject to change at any time, without notice. Illustrations for demonstration purposes.

Copyright © 2020 Hoshizaki Lancer Pty Ltd. All right reserved. E&OE Date: May 2020